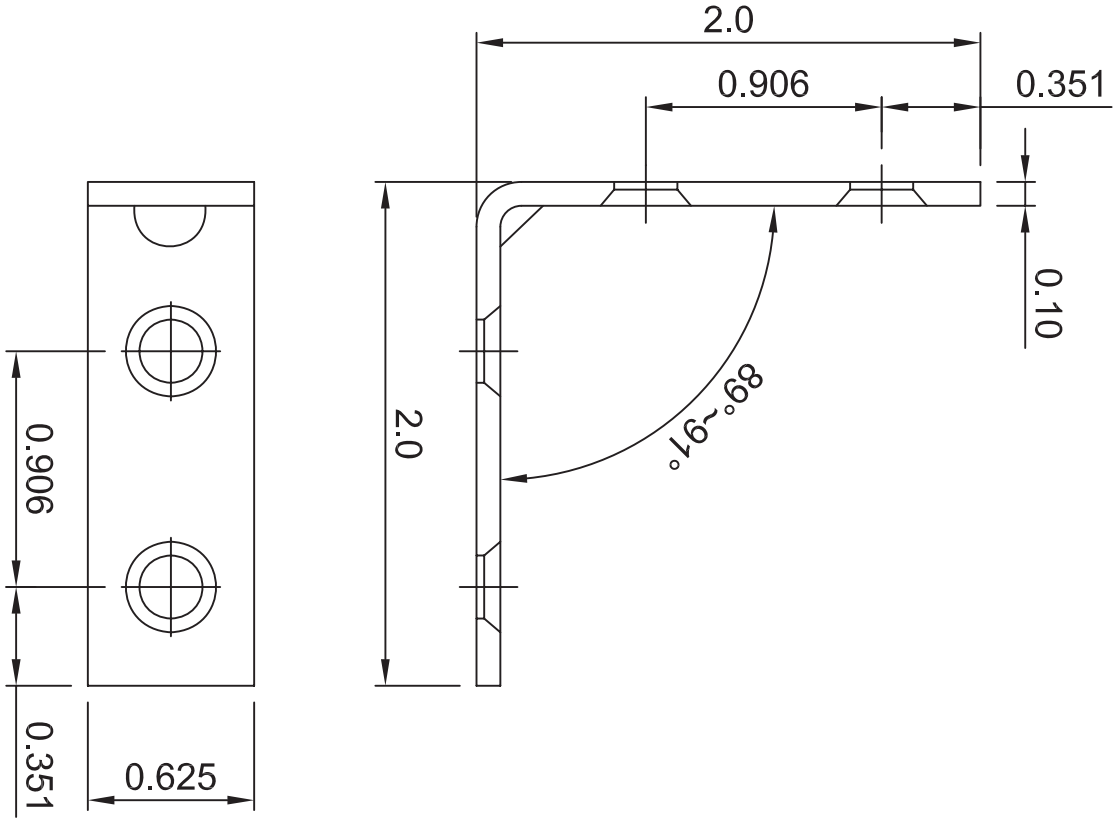

MARKER	COUNT	AREA	REVISION	APPROVE	DATE	
DRAWING				STANDIZATION		
DESIGNING						
CHECK						
TECHNICS				APPROVE		

Corner Brace 2"x5/8"
97X20

REVISION	WEIGHT	SCALE	DRAWING NO.		PROJECTION
			MATERIAL		UNITS
			FINISH		TOLERANCE

inch